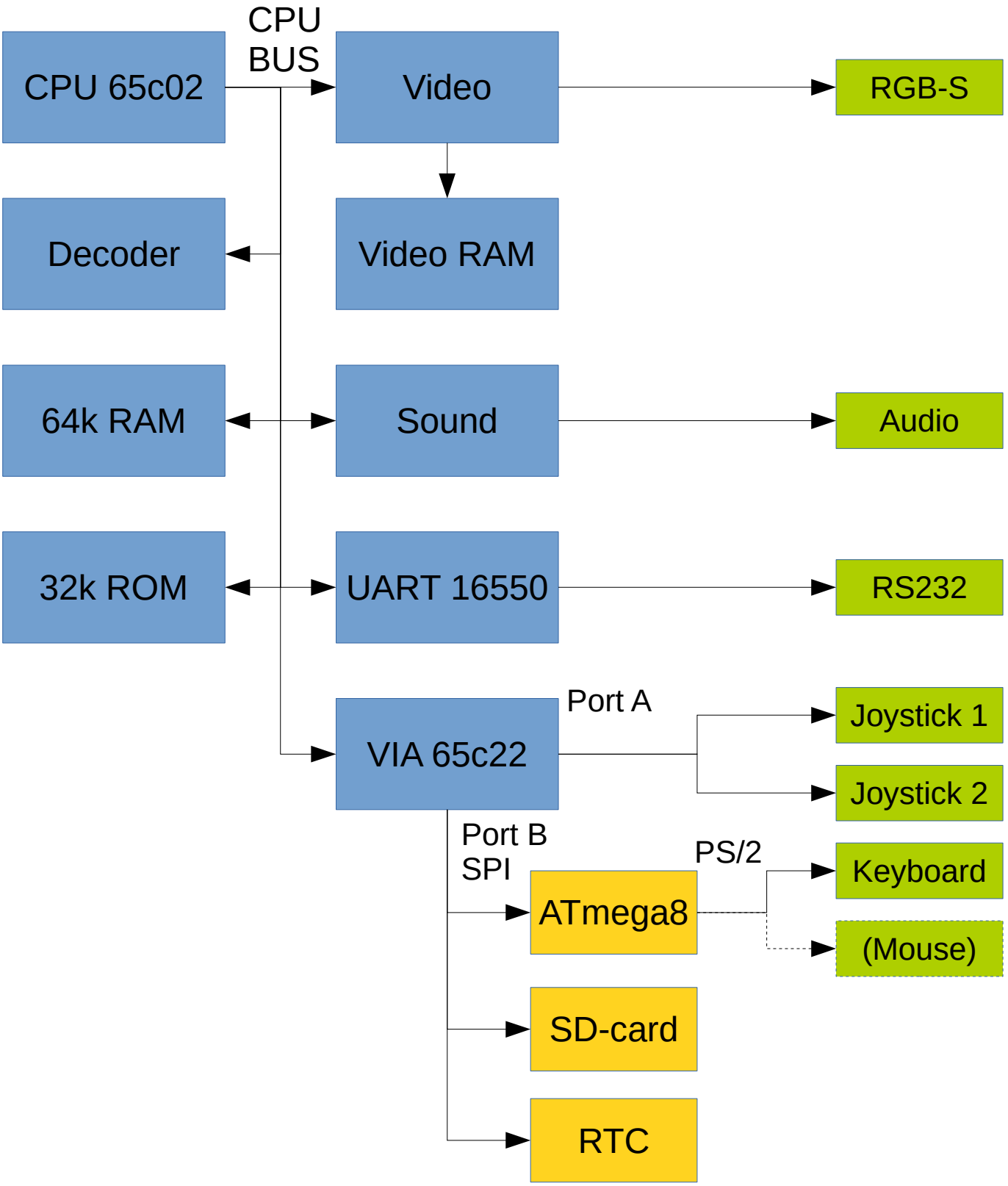
CPU 65c02
CPU BUS
Video
RGB-S
Decoder
Video RAM
64k RAM
Sound
Audio
32k ROM
UART 16550
RS232
Port A
VIA 65c22
Joystick 1
Joystick 2
Port B
SPI
PS/2
Keyboard
ATmega8
(Mouse)
SD-card
RTC